# 137 DIGITAL TUBE THICKNESS CALIPER

Data output

CR2032

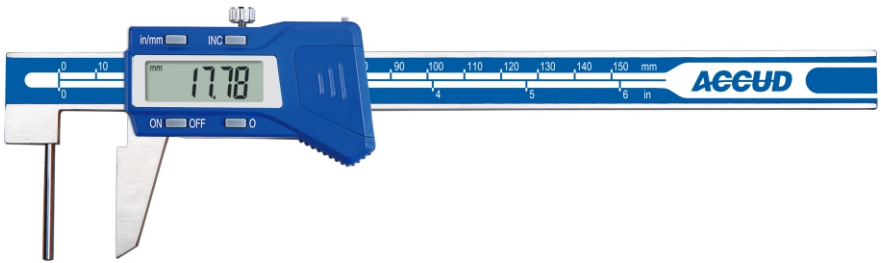


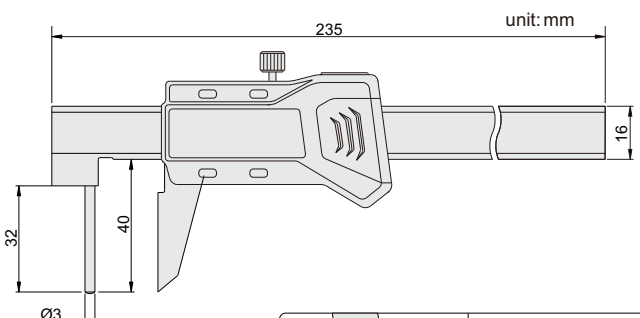


- Measure the wall thickness
- Resolution: 0.01mm/0.0005"
- Automatic power on/off
- Buttons: on/off, zero, mm/in, INC
- Data output(cable code:100-03 or 100-04)
- Made of stainless steel

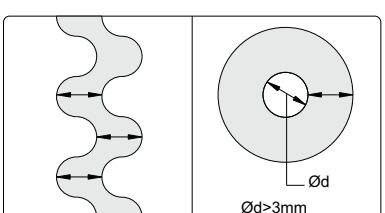


| Code | Range | Accuracy |
|---|---|---|
| **137-006-11** | 0-150mm/0-6" | ±0.05mm |