DIGITAL INSIDE KNIFE-EDGE CALIPER

Data output

CR2032

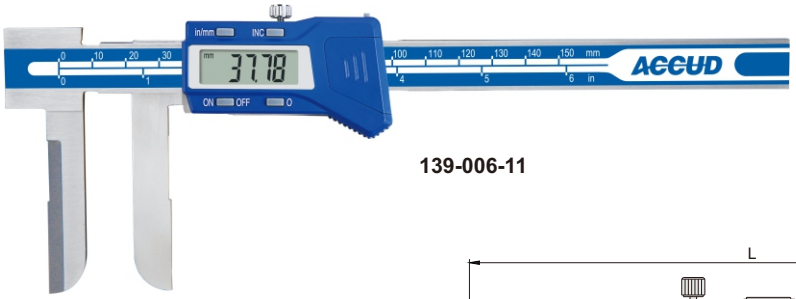

139-006-11

- Measure the diameter of deep holes or grooves
- Resolution: 0.01mm/0.0005"
- Automatic power on/off
- Buttons: on/off, zero, mm/in, INC
- Data output(cable code: 100-03 or 100-04)
- Made of stainless steel

unit: mm

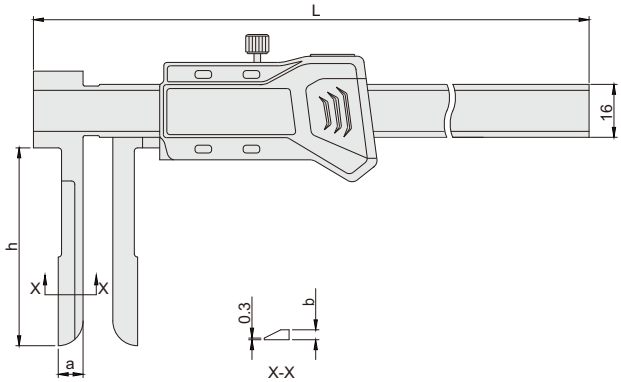
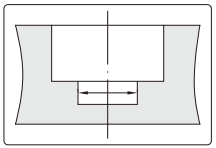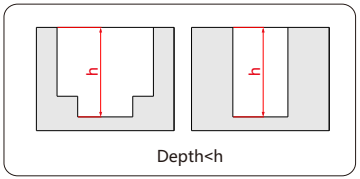
Code	Range	Accuracy	L	h	a	b
139-006-11	15-150mm	±0.05mm	250	60	12	3
139-008-11	20-200mm	±0.05mm	310	90	15	4
139-012-11	20-300mm	±0.06mm	410	90	16	4